SG6951 365A31-1090-00

Scissors Link Bushings bonding tool

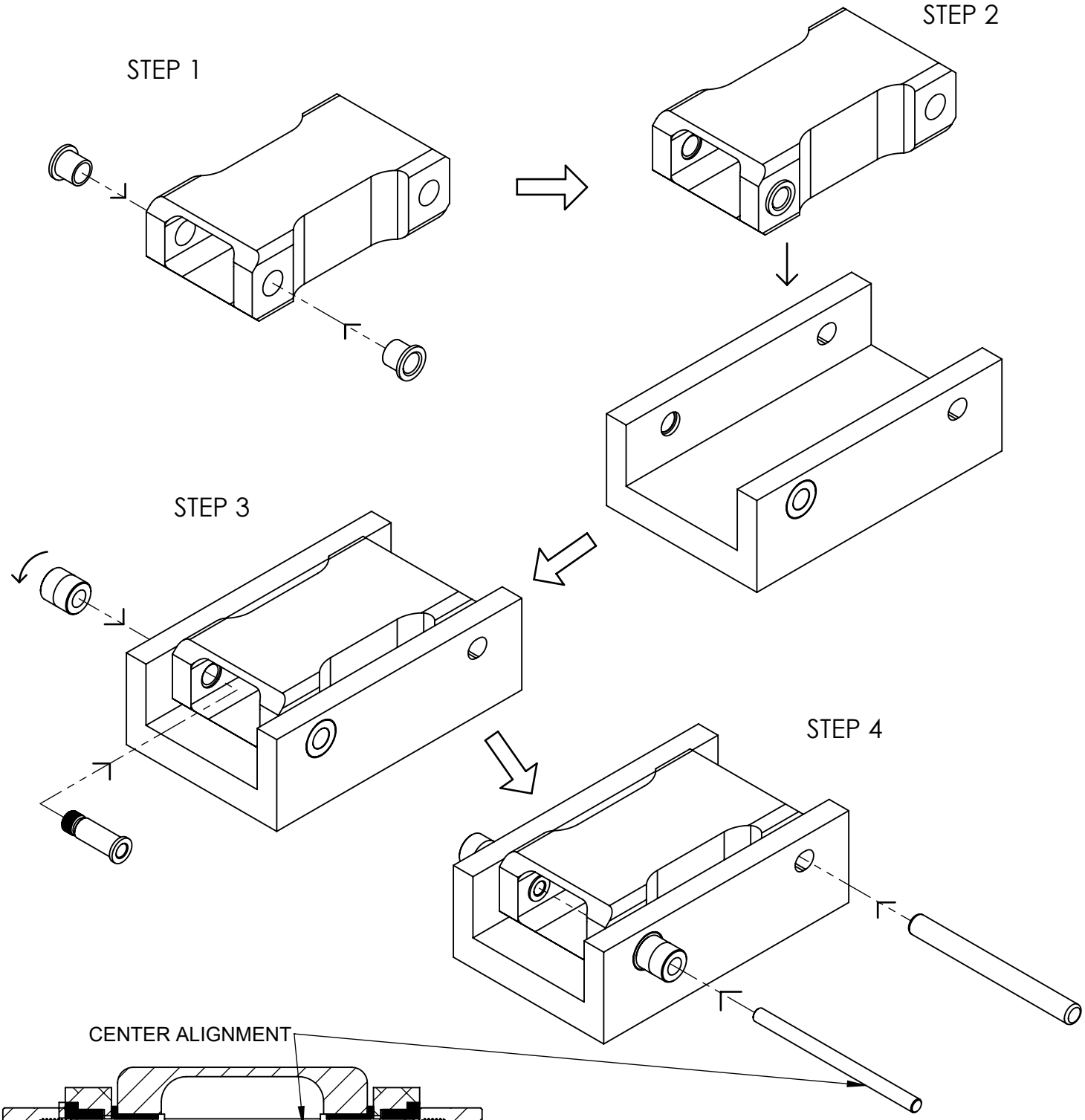

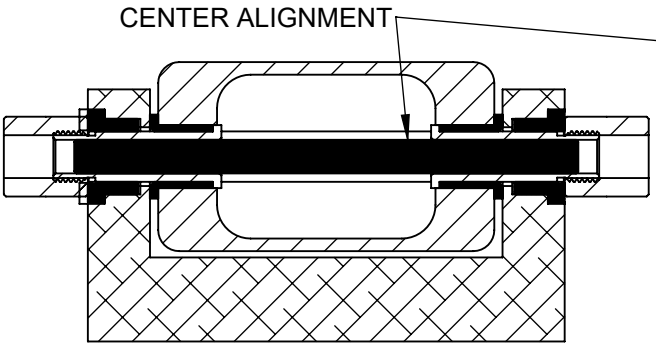

NOTE
Lubricate all parts of the tool to prevent them from being attached to the scissor when using LOCTITE or any locking fluid.

This document is for tool use only, does not replace any information described in the OEM's manual.

EXTRACTOR
SG6801350A37-1126-01

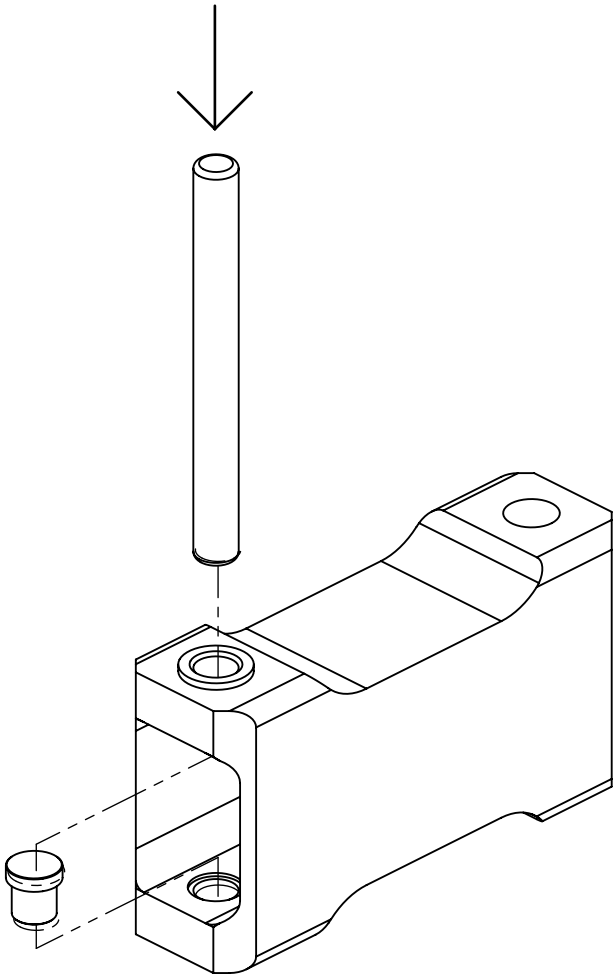

This document is for tool use only, does not replace any information described in the OEM's manual.